Toward Efficient Generation of Large-*N* Photonic Fock States

Colin P. Lualdi[1], Tiphaine Kouadou[1], Ryan J. Cardman[2],

Vladyslav V. Ivanov[2], Paul G. Kwiat[1]

[1]*Department of Physics, Illinois Quantum Information Science and Technology Center, The Grainger College of Engineering, University of Illinois Urbana-Champaign, 61801, Urbana, USA*

[2]*Physical Sciences Inc., 01810, Andover, USA*

Optical Fock states consist of *N* photons occupying a common mode (e.g., spatial, spectral-temporal, polarization, etc.). They are an essential resource for many exotic multi-photon states relevant to optical quantum information science, such as *N*00*N* states. However, experimental demonstrations of large-*N* Fock states have been limited, with low success probabilities and optical loss among the major challenges.

We are developing a Fock-state source that seeks to address these challenges. To enhance the success probability, we leverage nonlinear optics to make repeated generation attempts [1]. A heralded single-photon source (spontaneous parametric down-conversion) is placed within a free-space ring cavity (Fig. 1). The cavity round-trip propagation time is matched to the pump repetition rate such that newly heralded photons overlap with stored photons from earlier attempts. Once the state contains the desired number of photons, it is released from the cavity via a polarization switch.

We discuss our loss mitigation strategies. By optimizing the cavity waists for our down-conversion source and utilizing low-loss optics, we are targeting a round-trip propagation loss of ≤1%. Furthermore, number-resolving heralding and careful management of photon-detection and switching latencies allow us to limit loss accumulation by minimizing the number of cavity passes. Finally, we review our latest experimental results and comment on techniques for characterizing the generated states.

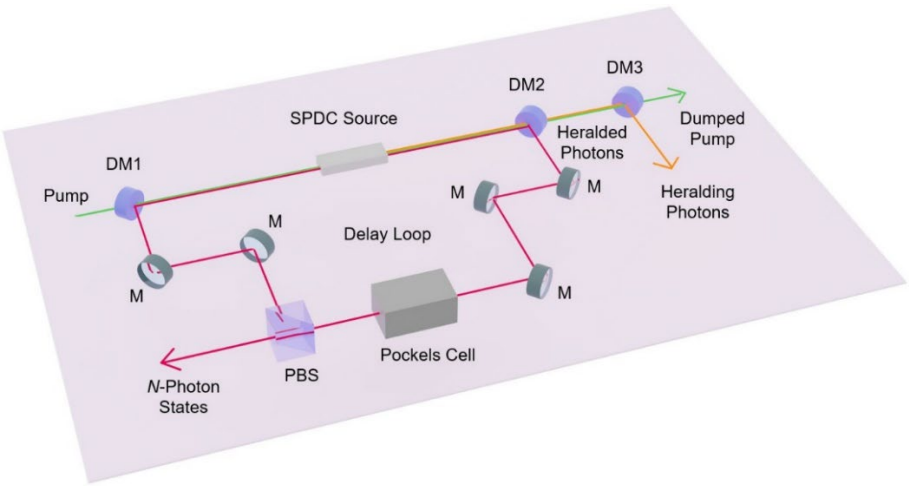

Fig. 1: *High-level schematic of our Fock-state source. M, mirror; DM, dichroic mirror; SPDC, spontaneous parametric down-conversion; PBS, polarizing beamsplitter. Figure credit: Colin P. Lualdi and Kelsey Ortiz.*

Funding acknowledgement

This material is based upon work supported by the National Aeronautics and Space Administration under Grant/Contract/Agreement No. 80NSSC25CA031 and by the U.S. National Science Foundation under award No. 2515092.

References

[1] K. T. McCusker and P. G. Kwiat, Phys. Rev. Lett. **103**, 163602 (2009).